HYDRONIC COMPONENTS INC

Quote Number:

Submittal

Job Name:

Buy Sell Rep:

Date:

Contacts

Brian Aichele

Western Regional
(P) 682.704.2144
brian.aichele@hcivalve.com

Phil Robinson

Eastern Regional
(P) 864.280.0192
phil.robinson@hcivalve.com

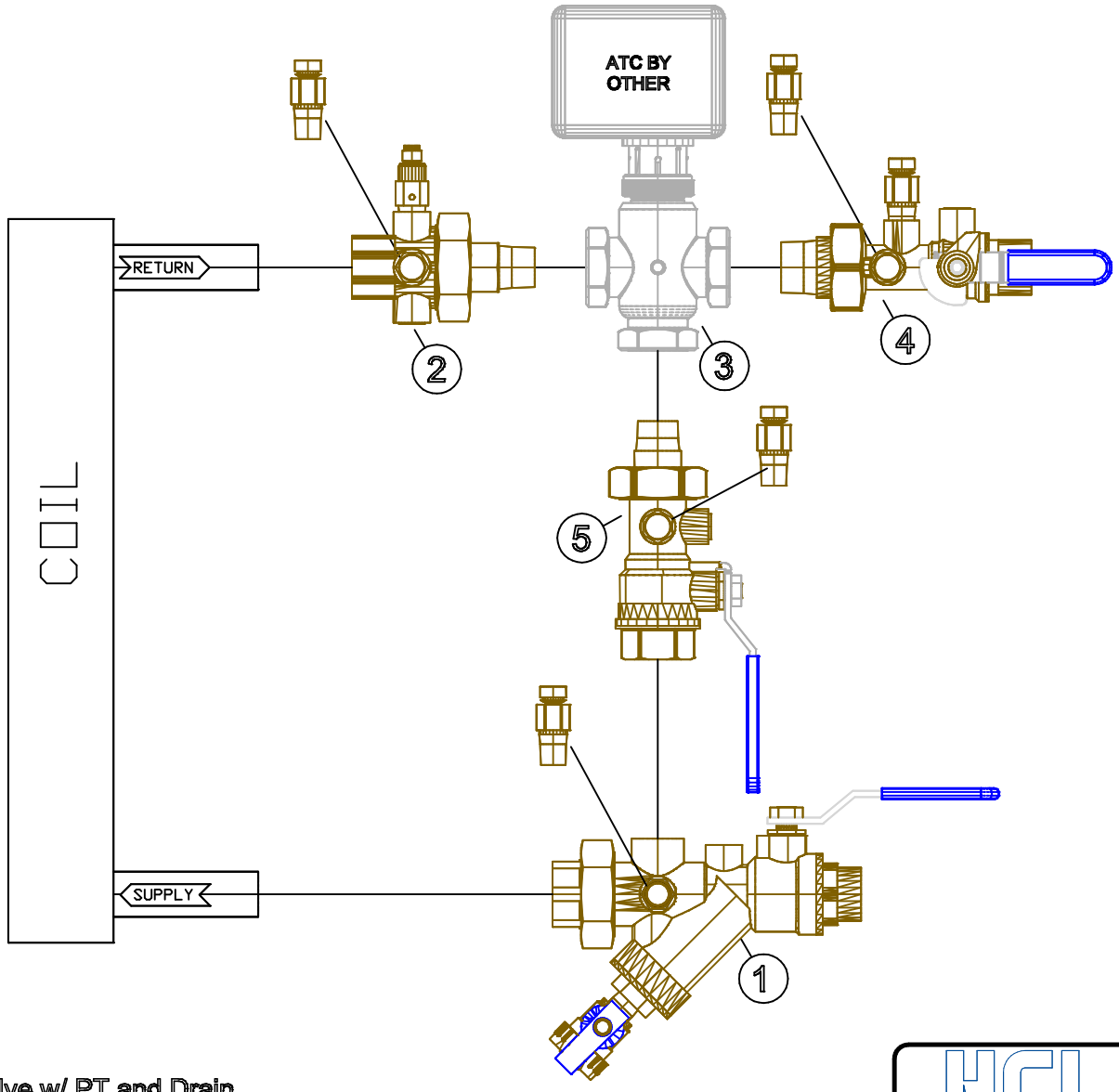

1. TY - Y-strainer, Union, Ball Valve w/ PT and Drain
2. TU - Union w/ PT and Manual Air Vent
3. ATC - By Other
4. TB - Manual Balance Valve, Ball Valve, Union, two PTs
5. NT - Ball Valve, Union w/ PT

HCI
PETTINAROLI HYDRONICS USA

This document cannot be used by others for any purpose, without prior written consent

Title: 3YUBN□-QV□□

HCI
32853 Edwards Ave.
Madison Heights, MI 48071
P: 586-268-1640 F: 586-979-8318
www.hciterminator.com

Plant	Date	Graphic scale	Client ref.
	7/22/2021	DRAWING NOT TO SCALE	

Combination Strainer Valve

Y-Strainer • Isolation Ball Valve • Union • 600 WOG

TY1

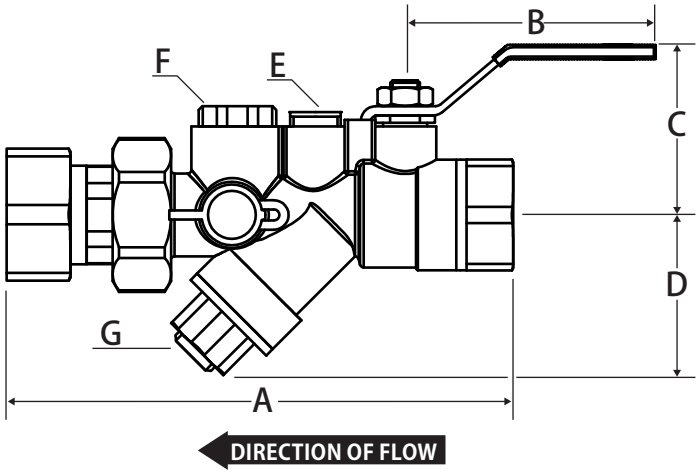

Features

- Three additional accessory taps
- Triple sealing stem with 2 Viton® o-rings and Teflon® seal
- Blow out proof stem
- 100% leak tested

Pressure and Temperature Rating

- 600 WOG
- 325°F Max

Smart Part Number Ordering Guide

TY1-BFRM-QX

TY1 | **B** | **F** | **RM** | **Q** | **X**

Valve Size
- B 3/4"

Body Type
- F FNPT
- C SWT

Tailpiece Size and Type

No Reduction
- F FNPT
- M MNPT
- C SWT

Single Reduction
- RF FNPT
- RM MNPT
- RC SWT

Optional

Optional Accessories
- X Extended Handle, PT Ports, and Accessories
- V Manual Air Vent
- B Ball Valve Air Vent
- Q Blowdown / Drain

Material Specifications

Part	Material
Body	Brass - C85700
End Connection	Brass -CW617N
Ball	Chrome Plated Brass -CW617N
Seat (2)	PTFE
Stem	Brass -CW617N
Packing	PTFE
Stem O-ring (2)	Viton®
Packing Gland	Brass -CW617N
Handle	Steel - Zinc Plated
Handle Nut	Brass -CW617N
Service Cap	Brass -CW617N
Service Cap O-ring	Viton®
Strainer	304 Stainless Steel
Union Gasket	EPDM
Tailpiece	Brass - C37700
Union Nut	Brass - C37700

Dimensions

Size	A*	B	C	D	E	F	G	Cv
3/4"	5.70	3.08	2.00	1.55	0.25	0.50	0.25	5.50

*Length is for a SWT x FNPT valve, additional dimensions available upon request

© 2021 HCi • www.hcivalve.com • P: (586) 268-1640 • F: (586) 979-8318

Combination Strainer Valve

Y-Strainer • Isolation Ball Valve • 20 Mesh Strainer with Union and PT Port • 600 WOG

* Shown with optional blowdown drain.

TY

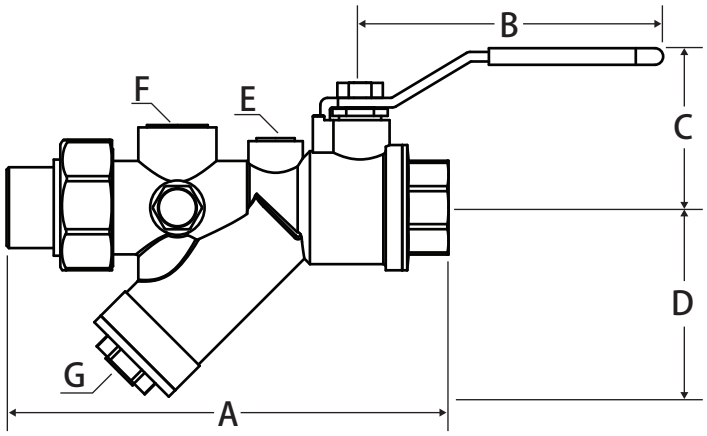

DIRECTION OF FLOW

Features

- Three additional accessory tap
- Triple sealing stem with 2 Viton® o-rings and Teflon® seal
- Blow out proof stem
- 100% leak tested

Pressure and Temperature Rating

- 600 WOG
- 325°F Max

Smart Part Number Ordering Guide

TY-CF2RM-QX

TY	C	F	2RM	Q	X

Valve Size

A	1/2"
B	3/4"
C	1"
D	1-1/4"
E	1-1/2"
F	2"

Body Type

F	FNPT
C	SWT

Tailpiece Size and Type

No Reduction	
F	FNPT
M	MNPT
C	SWT
Single Reduction*	
RF	FNPT
RM	MNPT
RC	SWT
Double Reduction**	
2RF	FNPT
2RM	MNPT
2RC	SWT

*Only available on 3/4" - 2" valves
**Only available on 1" - 2" valves

Optional

Optional Accessories

X	Extended Handle, PT Ports, and Accessories
V	Manual Air Vent
B	Ball Valve Air Vent
Q	Blowdown / Drain

Material Specifications

Part	Material
Body	Brass -CW617N
End Connection	Brass -CW617N
Ball	Chrome Plated Brass -CW617N
Seat (2)	PTFE
Stem	Brass -CW617N
Packing	PTFE
Stem O-ring (2)	Viton®
Packing Gland	Brass -CW617N
Handle	Steel - Zinc Plated
Handle Nut	Brass -CW617N
Service Cap	Brass -CW617N
Service Cap O-ring	Viton®
Strainer	304 Stainless Steel
Union Gasket	EPDM
Tailpiece	Brass -CW617N
Union Nut	Brass -CW617N

Dimensions

Size	A*	B	C	D	E	F	G	Cv
1/2"	5.03	3.40	1.70	1.60	0.25	0.50	0.25	5.50
3/4"	5.88	3.40	1.80	2.40	0.25	0.50	0.25	9.00
1"	6.25	3.40	1.80	2.40	0.25	0.50	0.25	9.00
1-1/4"	7.88	4.40	2.50	3.50	0.25	0.75	0.25	28.00
1-1/2"	8.00	4.40	2.50	3.50	0.25	0.75	0.25	28.00
2"	10.31	5.50	3.50	4.50	0.25	0.75	0.50	32.00

*Length is for a SWT x FNPT valve, additional dimensions available upon request

WARNING: This product can expose you to chemicals including lead, which is known to the State of California to cause cancer, birth defects or other reproductive harm. For more information go to www.P65Warnings.ca.gov.

© 2021 HCi • www.hcivalve.com • P: (586) 268-1640 • F: (586) 979-8318

Hydronic Union

600 WOG

TU

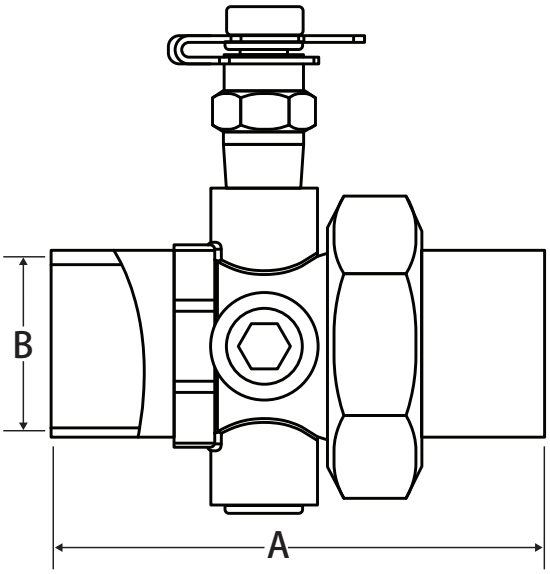

DIRECTION OF FLOW

Features

- Pressure / temperature (PT) test ports
- Additional accessory taps
- 100% leak tested

Pressure and Temperature Rating

- 600 WOG
- 325°F Max

Smart Part Number Ordering Guide

TU-AFC-QV

TU | **A** | **F** | **C** | **Q** | **V**

Valve Size

A	1/2"
B	3/4"
C	1"
D	1-1/4"
E	1-1/2"
F	2"

Body Type

F	FNPT
C	SWT

Tailpiece Size and Type

No Reduction

F	FNPT
M	MNPT
C	SWT

Single Reduction*

RF	FNPT
RM	MNPT
RC	SWT

Double Reduction**

2RF	FNPT
2RM	MNPT
2RC	SWT

*Only available on 3/4" - 2" valves
**Only available on 1" - 2" valves

Optional

Optional Accessories

X	Extended PT Port / Accessories
V	Manual Air Vent
B	Ball Valve Air Vent
Q	Blowdown / Drain

Material Specifications

Part	Material
Body	Brass - CW617N
O-ring	EPDM
Tail Piece	Brass - CW617N
Union Nut	Brass - CW617N

Dimensions

Size	A	B
1/2"	2.30	0.63
3/4"	3.10	0.88
1"	3.28	1.13
1-1/4"	3.99	1.38
1-1/2"	3.86	1.63
2"	4.65	2.13

Note: Dimensions for a SWT x SWT valve, additional dimensions available upon request

WARNING: This product can expose you to chemicals including lead, which is known to the State of California to cause cancer, birth defects or other reproductive harm. For more information go to www.P65Warnings.ca.gov.

© 2021 HCi • www.hcivalve.com • P: (586) 268-1640 • F: (586) 979-8318

Manual Balancing Valve

Fixed Orifice • Isolation Ball Valve • Memory Stop • Union • 600 WOG

TB

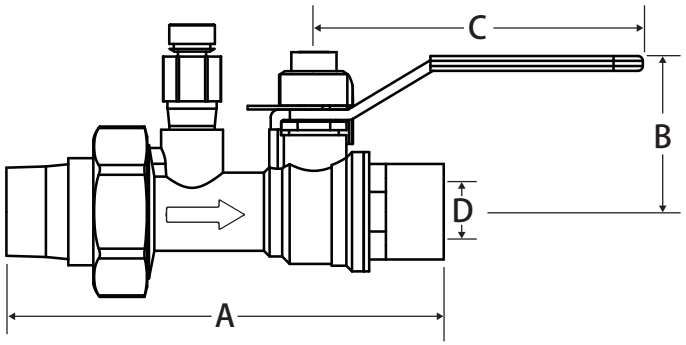

Features

- Patented removable venturi
- +/- 2% Accuracy
- Two pressure / temperature (PT) test ports
- Location tag
- Additional accessory tap
- Triple sealing stem with 2 Viton® o-rings and Teflon® seal
- Blow out proof stem
- 100% leak tested
- Made in Italy
- Leakproof stem - Lifetime warranty
- See end of catalog for pressure drop charts

Pressure and Temperature Rating

- 600 WOG
- 325°F Max

Smart Part Number Ordering Guide

TB-CF2RM-XV

TB	C	F	2RM	X	V

Valve Size

A	1/2"
B	3/4"
C	1"
D	1-1/4"
E	1-1/2"
F	2"

Body Type

F	FNPT
C	SWT

Tailpiece Size and Type

No Reduction	
F	FNPT
M	MNPT
C	SWT
Single Reduction*	
RF	FNPT
RM	MNPT
RC	SWT
Double Reduction**	
2RF	FNPT
2RM	MNPT
2RC	SWT

*Only available on 3/4" - 2" valves
**Only available on 1" - 2" valves

Optional

Optional Accessories

X	Extended Handle, PT Ports and Accessories
V	Manual Air Vent
B	Ball Valve Air Vent

Material Specifications

Part	Material
Body	Brass - CW617N
End Connection	Brass - CW617N
Ball	Chrome Plated Brass -CW617N
Seat (2)	Virgin PTFE
Stem	Brass - CW614N
Packing	Virgin PTFE
Stem O-ring (2)	Viton®
Packing Gland	Brass - CW614N
Handle	Steel - Geomet® Plated
Handle Nut	Steel - Geomet® Plated
Metering Plate	Aluminum
Memory Stop	Brass - CW617N
Memory Stop Screw	Steel - Geomet® Plated
Union O-ring	Viton®
Tail Piece	Brass - CW617N
Union Nut	Brass - CW617N
Venturi	Brass - CW614N
Venturi O-ring	Viton®

Dimensions

Size	A*	B	C	D
1/2"	4.56	1.57	2.95	0.59
3/4"	4.88	1.57	2.95	0.59
1"	5.65	1.93	3.74	0.79
1-1/4"	7.00	2.44	4.72	0.98
1-1/2"	7.81	2.64	4.72	1.26
2"	9.19	3.29	5.91	1.58

*Length is for a SWT x MNPT valve, additional dimensions available upon request

WARNING: This product can expose you to chemicals including lead, which is known to the State of California to cause cancer, birth defects or other reproductive harm. For more information go to www.P65Warnings.ca.gov.

© 2021 HCi • www.hcivalve.com • P: (586) 268-1640 • F: (586) 979-8318

Pressure Drop Chart

Terminator B (1/2" - 1")

CV of Valves

- #3 Venturi: **0.44**
- #4 Venturi: **1.30**
- #6 Venturi: **2.65**
- #7.5 Venturi: **3.61**
- #9 Venturi: **7.05**
- #12 Venturi: **11.40**
- #10 Venturi: **7.05**
- #14.5 Venturi: **17.6**

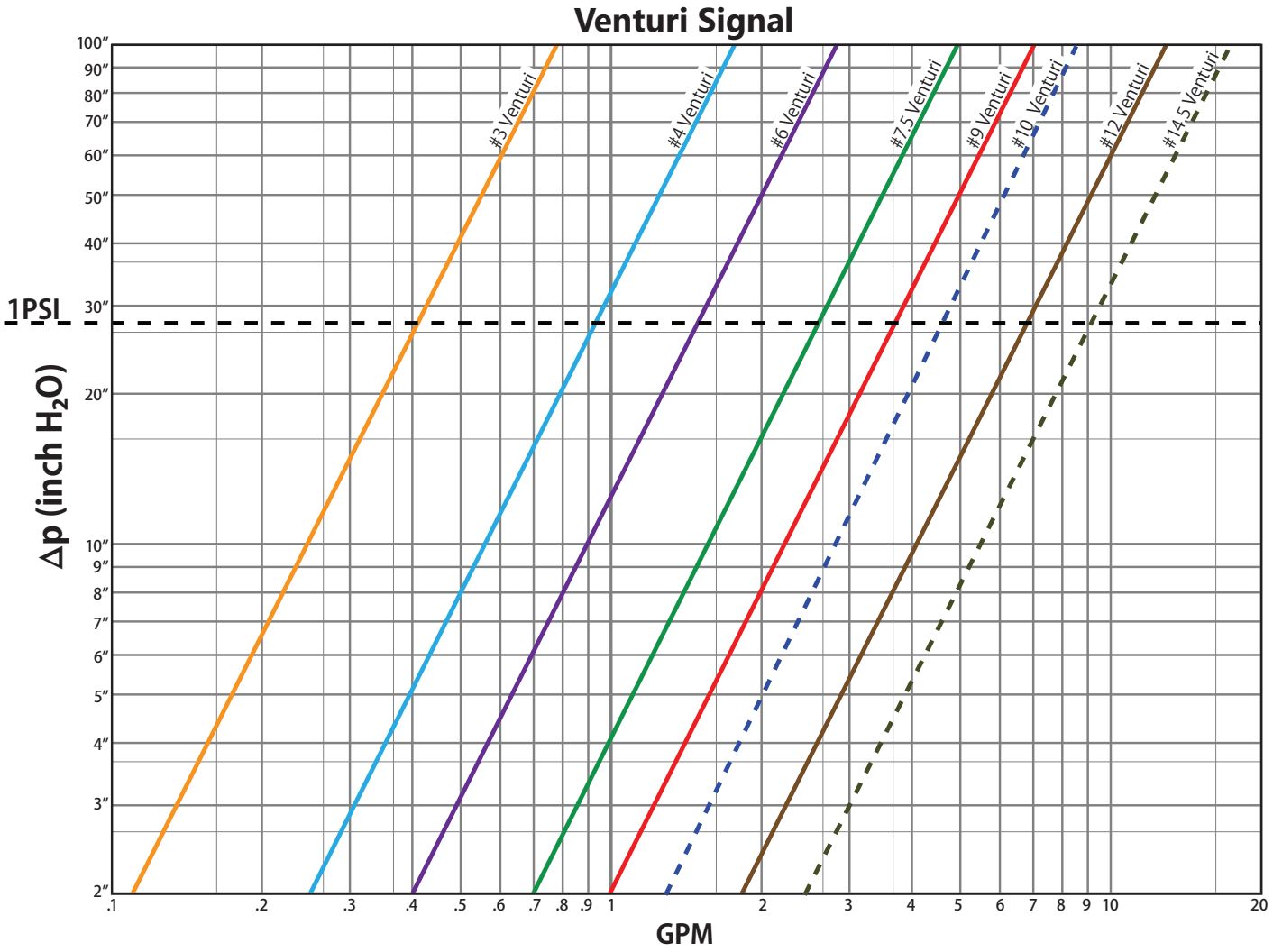

© 2021 HCi • www.hcivalve.com • P: (586) 268-1640 • F: (586) 979-8318

Pressure Drop Chart

Terminator B (1-1/4" - 2")

CV of Valves

- 1-1/4" w/ #13 Venturi: **15.0**
- 1-1/4" w/ #19 Venturi: **34.0**
- 1-1/2" w/ #15 Venturi: **20.9**
- 1-1/2" w/ #22 Venturi: **57.0**
- 2" w/ #18 Venturi: **30.8**
- 2" w/ #25 Venturi: **57.0**
- 2" w/ #32 Venturi: **88.0**

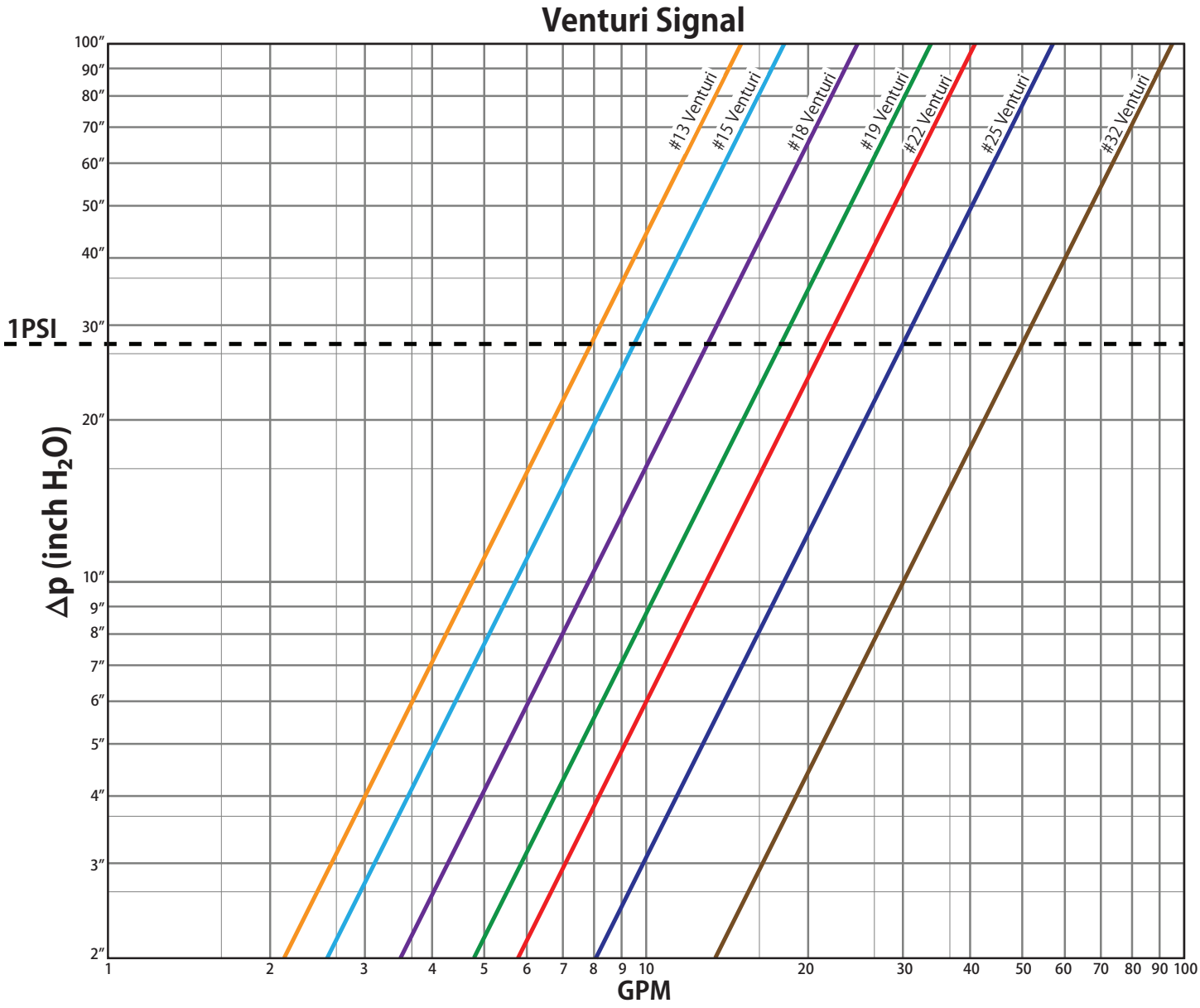

Combination Ball Valve

Isolation Ball Valve • Union • 600 WOG

NT

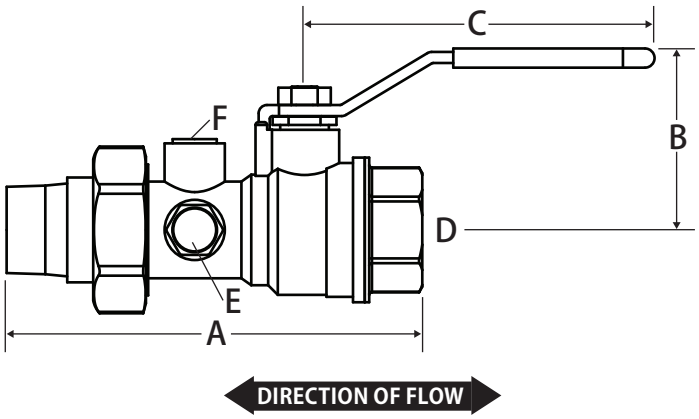

Features

- Pressure / temperature (PT) test ports
- Additional accessory tap
- Triple sealing stem with 2 Viton® o-rings and Teflon® seal
- Blow out proof stem
- 100% leak tested
- Made in Italy
- Leakproof steam - Lifetime warranty

Pressure and Temperature Rating

- 600 WOG
- 325°F Max

Material Specifications

Part	Material
Body	Brass - CW617N
End Connection	Brass - CW617N
Ball	Chrome Plated Brass -CW617N
Seat (2)	Virgin PTFE
Stem	Brass - CW614N
Packing	Virgin PTFE
Stem O-ring (2)	Viton®
Packing Gland	Brass - CW614N
Handle	Steel - Geomet® Plated
Handle Nut	Steel - Geomet® Plated
Union O-ring	Viton®
Tail Piece	Brass - CW617N
Union Nut	Brass - CW617N

Smart Part Number Ordering Guide

NT-CFRF-MX

NT	C	F	RF	M	X

Valve Size

A	1/2"
B	3/4"
C	1"
D	1-1/4"
E	1-1/2"
F	2"

Body Type

F	FNPT
C	SWT

Tailpiece Size and Type

No Reduction	
F	FNPT
M	MNPT
C	SWT
Single Reduction*	
RF	FNPT
RM	MNPT
RC	SWT
Double Reduction**	
2RF	FNPT
2RM	MNPT
2RC	SWT

*Only available on 3/4" - 2" valves
**Only available on 1" - 2" valves

Optional

Optional Accessories

X	Extended Handle, PT Port, and Accessories
V	Manual Air Vent
B	Ball Valve Air Vent
M	Memory Stop
Q	Blowdown / Drain

Dimensions

Size	A*	B	C	D	E	F	Cv
1/2"	4.68	1.53	2.95	0.59	0.25	0.25	16.82
3/4"	4.73	1.93	3.74	0.79	0.25	0.25	34.80
1"	5.44	2.40	4.72	1.00	0.25	0.25	52.20
1-1/4"	6.45	2.59	4.72	1.25	0.37	0.25	112.52
1-1/2"	7.10	3.22	5.90	1.57	0.37	0.25	174.00
2"	7.68	3.50	5.90	2.00	0.37	0.25	255.20

*Length is for a FNPT x MNPT valve, additional dimensions available upon request

WARNING: This product can expose you to chemicals including lead, which is known to the State of California to cause cancer,birth defects or other reproductive harm. For more information go to www.P65Warnings.ca.gov.

© 2021 HCi • www.hcivalve.com • P: (586) 268-1640 • F: (586) 979-8318

Drain and Blowdown Valve

Isolation Ball Valve • 600 WOG

Picture shown is TQ-B1

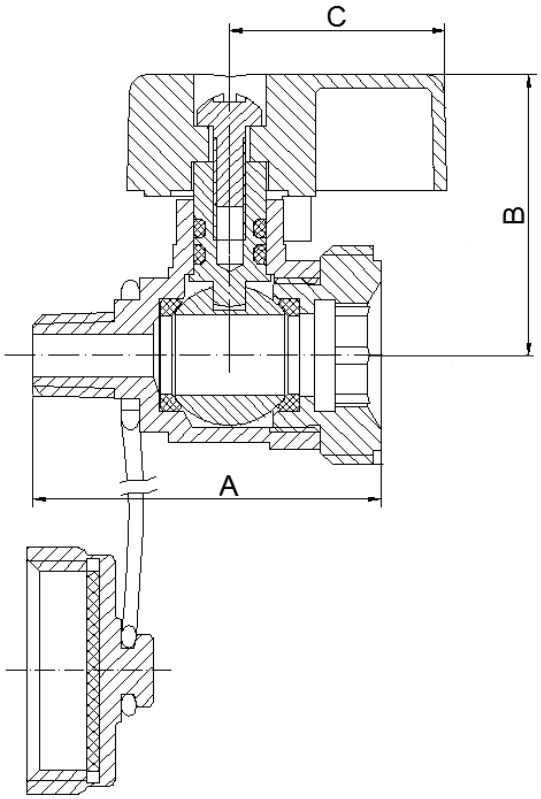

Features

- 3/4" garden hose drain connection
- Includes drain cap and retainer
- 100% leak tested

Pressure and Temperature Rating

- 600 WOG
- 300°F Max

WARNING: This product can expose you to chemicals including lead, which is known to the State of California to cause cancer, birth defects or other reproductive harm. For more information go to www.P65Warnings.ca.gov.

Material Specifications

Part	Material
Body	Brass - CW617N
Retaining Ring	Brass - CW617N
Ball	Chrome Plated Brass - C3604DB
Seat (2)	PTFE
Stem	Brass - CW617N
Stem Sealing	EPDM
Handle	Painted Aluminum
Screw	Steel - Nickel Plated
Cap	Brass - CW617N
Retaining Strap	Plastic
Washer Ring	EPDM

Dimensions

Part #	Inlet	Outlet	A	B	C
TQ-B1	1/4" MNPT	3/4" GH	1.76	1.37	1.06
TQ-B3-N	1/2" MNPT	3/4" GH	1.81	1.36	0.88
TQ-B4	3/4" MNPT	3/4" GH	3.28	1.70	4.39

© 2021 HCi • www.hcivalve.com • P: (586) 2 68-1640 • F: (586) 979-8318

Manual Air Vent

Coin Operated • 250 WOG

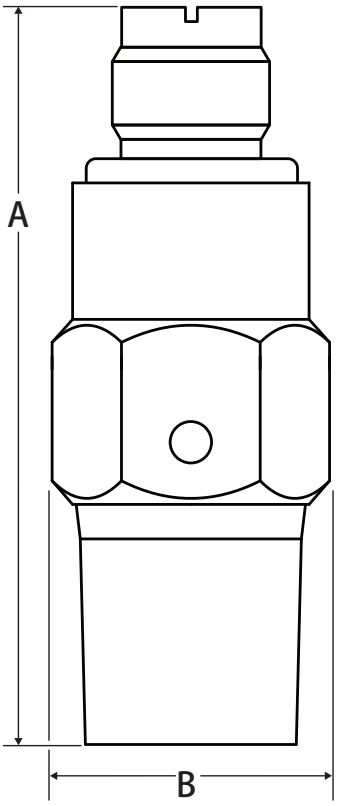

Features
- 100% leak tested

Pressure and Temperature Rating
- 250 WOG
- 250°F Max

Material Specifications

Part	Material
Body	Brass - C36000
Plug Screw	Brass - C36000

Dimensions

Part #	Size	A	B
TV-A2	1/4" MNPT	1.63	0.58
TVX-A2-N	1/4" MNPT	2.75	0.58

WARNING: This product can expose you to chemicals including lead, which is known to the State of California to cause cancer, birth defects or other reproductive harm. For more information go to www.P65Warnings.ca.gov.

© 2021 HCi • www.hcivalve.com • P: (586) 268 -1640 • F: (586) 979-8318